Available online at www.sciencedirect.com

ScienceDirect

Energy Procedia 157 (2019) 999–1010

Energy Procedia

www.elsevier.com/locate/procedia

Technologies and Materials for Renewable Energy, Environment and Sustainability, TMREES18, 19–21 September 2018, Athens, Greece

Sustainable Energy Harvesting through Triboelectric Nano – Generators: A Review of current status and applications

D.A. Barkas [a], C.S. Psomopoulos[a]*, P. Papageorgas [a], K. Kalkanis [a], D. Piromalis [b], A. Mouratidis [c]

[a] *Electrical and Electronics Engineering Department, University of West Attica, Campus 2 Thivon 250, Aigaleo, Attica, Greece*
[b] *Industrial Design and Production Engineering Department, University of West Attica, Campus 2 Thivon 250, Aigaleo, Attica, Greece*
[c] *School of Civil Engineering, Aristotle University, Thessaloniki, Greece*

Abstract

Triboelectric nano-generators constitute a promising technology for energy harvesting that can be applied at a large scale and be integrated into the road infrastructure aiming at Energy sustainability and reduction of GHG emissions for road infrastructure operation. This technology can be also applied in small scale for the Internet of Things (IoT) applications, in human monitoring for healthcare applications, in precision agriculture as well as in industry, where the massive networking of sensors and actuators is mandatory and the requirements for energy supply are strict and critical. The usage of triboelectric nano-generators is a promising solution to supply all the above sensors and actuators, due to the autonomous characteristic for power supply that these application sectors will obtain and the minimization of battery usage, decreasing the overall Green House Gas emissions. In this article, a review and the current status of the triboelectric nano-generators (TENGs) is performed together with a number of application examples that are already demonstrated by the scientific community.

© 2019 The Authors. Published by Elsevier Ltd.
This is an open access article under the CC BY-NC-ND license (https://creativecommons.org/licenses/by-nc-nd/4.0/)
Selection and peer-review under responsibility of the scientific committee of Technologies and Materials for Renewable Energy, Environment and Sustainability, TMREES18.

Keywords: TENG, Harvesting, Scavenging, Triboelectric

* C.S. Psomopoulos. Tel.: +30 210 538 1182; fax: +30 210 538 1321.
E-mail address: cpsomop@puas.gr

1876-6102 © 2019 The Authors. Published by Elsevier Ltd.
This is an open access article under the CC BY-NC-ND license (https://creativecommons.org/licenses/by-nc-nd/4.0/)
Selection and peer-review under responsibility of the scientific committee of Technologies and Materials for Renewable Energy, Environment and Sustainability, TMREES18.
10.1016/j.egypro.2018.11.267

1. Introduction

TriboElectric Nano – Generators TENGs) belong to a type of mechanical energy harvesting technique where Mechanical Energy (friction from movement) is transformed into Electrical Energy [1]. Most commonly used techniques in order to harvest energy are based on mechanical vibrations and electromagnetic, triboelectric, electrostatic and piezoelectric mechanisms [2-5]. TENGs operation is based on the contact electrification and electrostatic induction. This technology presents promising high output power, high conversion efficiency and low cost of fabrication and materials [6]. A TENG has two basic modes of operation based on its direction of movement. The first operation is the vertical contact-separation mode and the second is the sliding mode. However, the basic operation which is the triboelectric effect initiates from the contact between two materials that differ in triboelectric polarity, which yields surface charge transfer [6]. In the current bibliography, nano generators use piezoelectric, electromagnetic and electrostatic effects. TENGs can be used as power suppliers for IoT sensors and as wearable sensors' power supplies as well. The following sections illustrate a number of technologies and current TENGs applications.

2. TENGs' Technologies

As it is already mentioned above, the TENG is based on two basic modes of operation, the contact-separation mode, and the sliding mode. The contact-separation mode, as its name describes, is a technique in which two different parts come in contact and then they separate from one another. In order to produce electrical energy via the contact-separation mode, these two parts should be of different materials. The basic idea is the charge exchange between the two materials. The Contact Mode TENG (CM-TENG) is composed of two plates, which have a contact layer and an electrode layer individually, but the materials of these contact layers are different. When the two surfaces come into contact, by an external force, one surface loses the charges whereas the other one gains the charges. When the two materials are detached, the contact surfaces have different electric potentials by unbalance of electric charges. Thus when there is a contact-separation operation, there is a charge exchange procedure which leads to an electric current flow if the two surfaces are connected by a wire **Error! Reference source not found.**. Fig. 1 illustrates this operation.

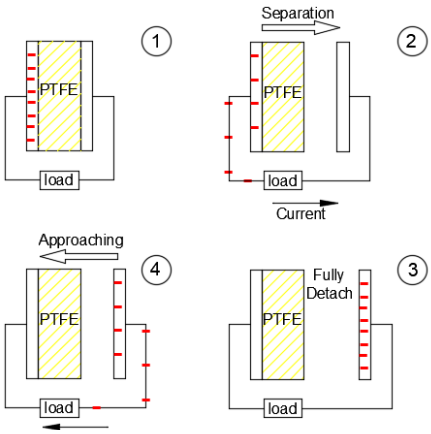

Fig. 1. The working principle of the contact-mode TENG [3]

The dielectric-arrangement in sliding mode is identical to that of the contact mode with the difference that the two materials will slide the one over the other thereby generating charges on the surface. When the two different layers are connected across a load, an AC output will be generated due to the periodic sliding apart and closing of the two triboelectric layers as Fig. 2 shows.

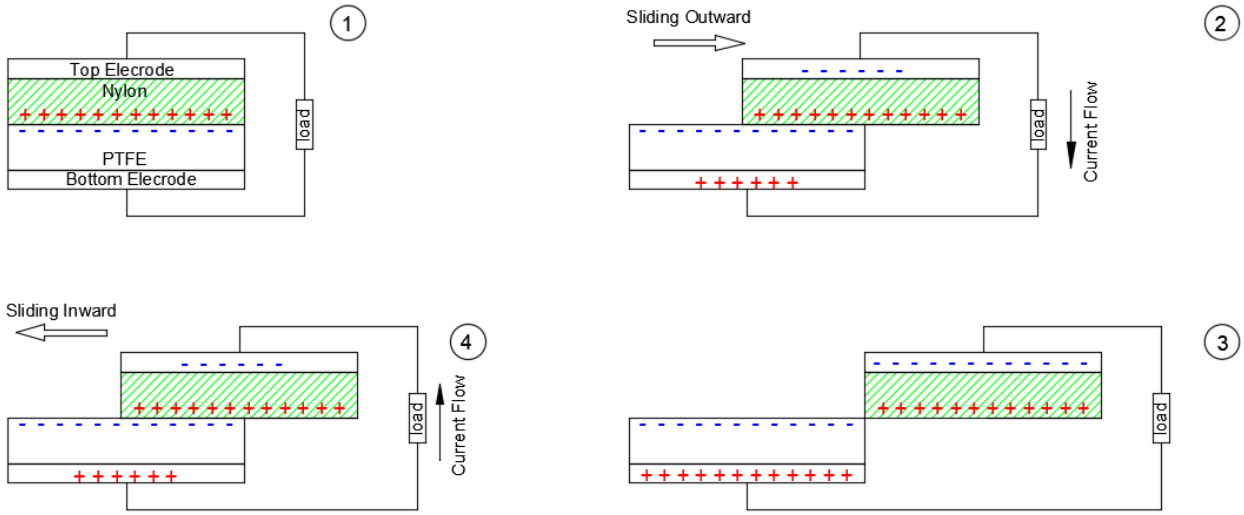

Fig. 2. The working principle of the Sliding mode triboelectric nanogenerator [3]

However, there is a trend to decrease the fabrication cost and also achieve a number of new applications such as energy harvesting from a rotating tire or touchpad sensor [7]. For this reason, a new need was created in the area of TENGs with the aim to fabricate electrodeless TENG which means the need of not depositing the metal electrodes on the triboelectric film materials.

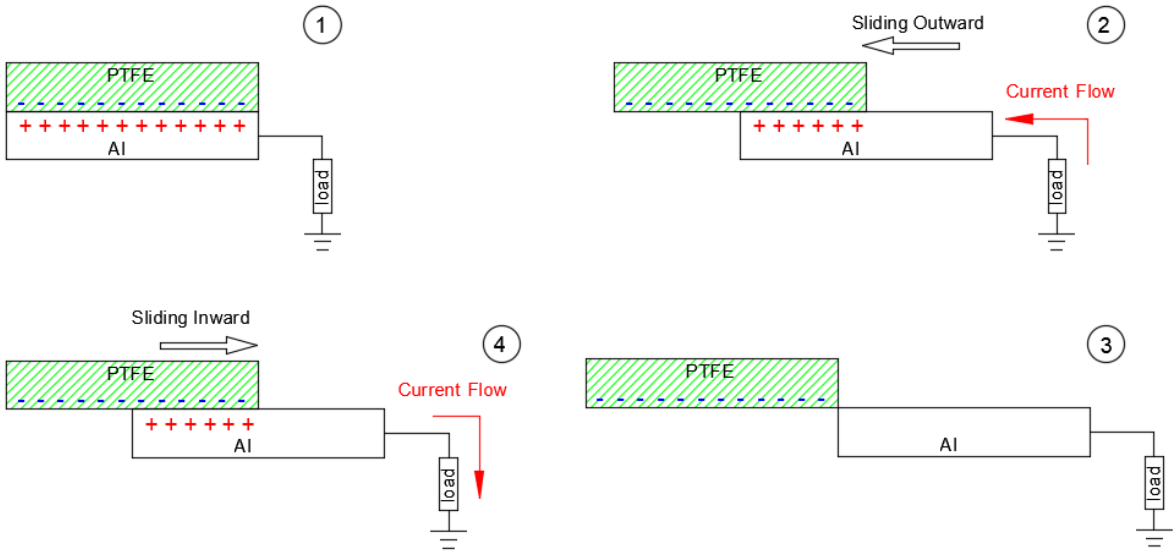

Fig. 3. Single electrode TENG's electricity generation process in a full cycle [7]

The solution is a new type of TENG, the single electrode TENG. Its working mechanism is based on the charge transfer between an Al electrode and the ground. Fig. 3 shows the working mechanism of such a single electrode TENG structure in its simplified version.

An important note is that in the traditional TENG structures each triboelectric layer is attached with an electrode and a lead wire, making such a device non-versatile and thus having limited applications [8]. For example, a traditional TENG cannot be applicable to harvest energy from an arbitrary moving object or a walking human, because the object has to be connected to the entire system by an interconnection. A solution to such a problem is a freestanding TENG structure. The mechanism is composed of 3 basic parts, the two stationary electrodes and one freestanding layer that move due to the external mechanical energy. Fig. 4 illustrates the working mechanism for a sliding freestanding TENG in its simplest version.

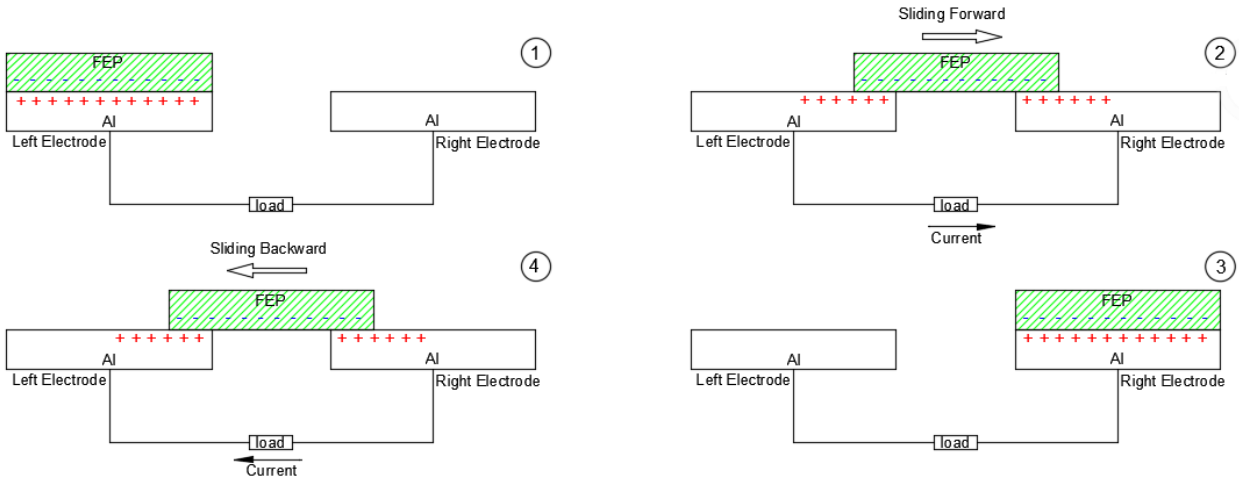

Fig. 4. Sliding freestanding TENG's mechanism [8]

The contact layers of a triboelectric generator can be constructed by special and unique material compositions or they can be constructed by common materials. According to [2, 9], the usage of common materials promises a challenging solution over special materials by the meaning of efficiency, while the utilisation of common materials can decrease the cost of TENGs and production time as well.

3. Application of TENGs

TENGs and triboelectric generators (TEGs) in general are devices that convert a kind of mechanical energy into electrical energy through the process of contact electrification and electrostatic induction. The mechanical energy can originate by the wind, the sea waves or any kind of vibration and mechanical movement generally. This section describes some specific and important applications of TENGs and TEGs that are used in industry and in everyday life.

Wang et.al in their work [10] reviewed the recent progress in blue energy harvesting using TENG technology, starting with a comparison between the EMG and the TENG both in physics and engineering design perspective. The power by waves breaking around the coastlines worldwide has been estimated to be about 2-3TW [10]. That means that on the open seas the corresponding power is quite bigger and it is estimated to be one order of magnitude larger. Therefore, wave energy is a very important source of energy. However, the usage of common water electric generators that will be fed by the wave energy, results in the usage of large and expensive constructions that have high maintenance and operation costs. Another serious problem is that wave energy is random and of the low frequency of electric power generation. In contrast, a TENG can be used for this type of energy because of high

power density, high efficiency, low weight and mass generally and low fabrication cost. Additionally, a TENG is a great solution for random energy with low-frequency electrical energy.

Wang et. al. [11] constructed a TENG based on a fully enclosed rolling spherical structure for harvesting low-frequency water wave energy. Fig. 5 shows the working mechanism of a TENG by coupling of triboelectrification effect and electrostatic induction. The rolling of the ball changes the capacitance of the system, resulting in a flow of electrons between the two electrodes in order to balance the electric potential drop. They measured that in a 6cm in diameter spherical TENG, the production using water waves can be 1μA with an instantaneous output power of up to 10mW.

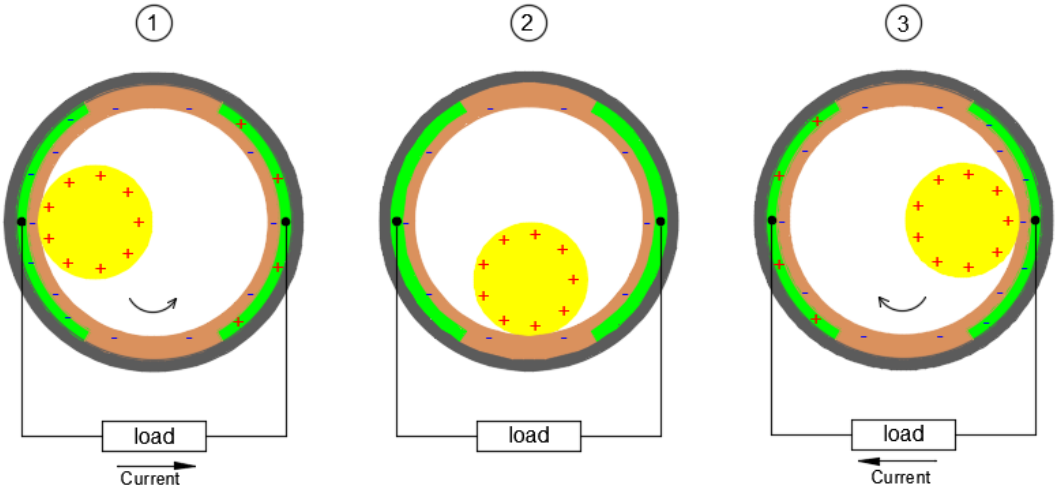

Fig. 5. Working mechanism of a TENG with rolling spherical Structure [11]

Zhu et. al. [12] in their work presented a TENG-based water wave energy harvester using asymmetric screening of electrostatic charges on a nanostructured hydrophobic thin-film surface. It is a liquid-solid electrification enabled generator based on a fluorinated ethylene propylene thin film, below which an array of electrodes is fabricated. It is lightweight with a small volume. Its basic characteristic is portability and flexibility which make it a very good solution for power supply on offshore areas. The proposed technology can be applied even in rainy places where the water drops are used. After a series of experiments, they measured a short circuit current of 3μA and a maximum open circuit voltage of 160V for water velocity of 0.5m/s. Fig. 6 illustrates the working mechanism for the proposed device.

Lin et. al, [13], present a mechanism that uses raindrops to harvest energy. Ocean waves, waterfalls and rainwater energies, are inexhaustible sources of energy and can be used as alternatives to other renewable energy sources. They developed two similar mechanisms, one for flowing water and one for the raindrop. Fig. 7a describes the working mechanism for the proposed water-TENG when the drop already have electric charge, whereas Fig. 7b describes the working mechanism for the proposed water-TENG when the drop has no charge. This water-TENG device can achieve a peak voltage of 9.3V and a peak current of 17μA, for a 30μL water drop. The maximum measured output power was 145μW when the water-TENG was connected with a 5MΩ load resistor.

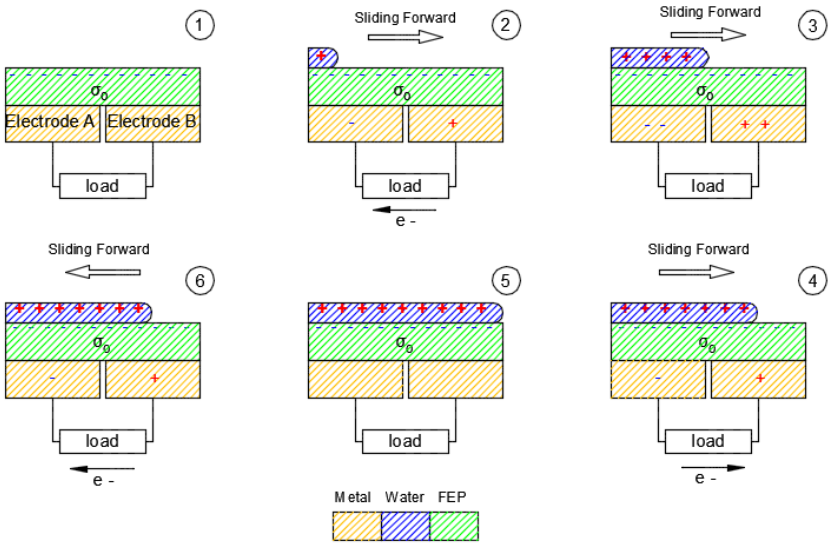

Fig. 6. The working mechanism for a water wave energy harvester which use asymmetric screening of electrostatic charges on a nanostructured hydrophobic thin-film surface [12]

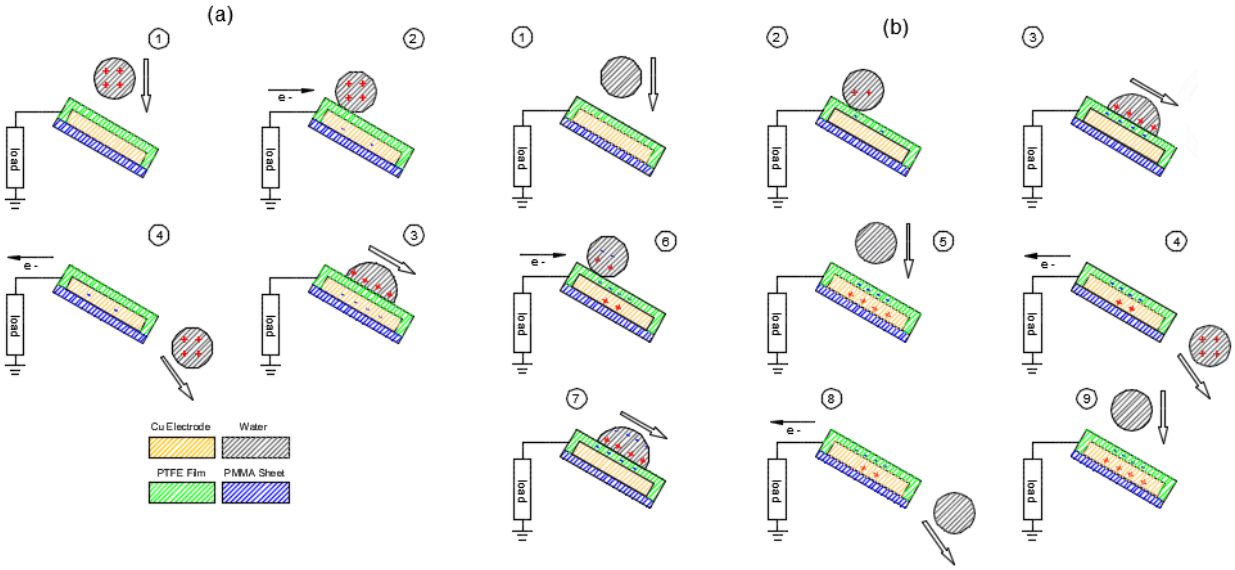

Fig. 7. Water-TENG working mechanisms when the generated triboelectricity is dominated by the contact electrification process with (a) the air or the pipes and (b) with the PTFE thin film [13]

Another interesting structure was proposed by Wen et al [14]. It is a fully enclosed TENG for water wave harvesting. Ocean wave energy has attracted great interest as a source of electrical energy for many years [15-16]. It can potentially meet 10% of the total worldwide electrical demand [17]. The principal oscillating frequencies within the flow are in the range of 30Hz to 300Hz with a pressure range between 50 to 350 Pa [18-19]. The proposed structure is based on a wavy-structured Cu-Kapton-Cu film sandwiched between two flat nanostructured PTFE films. Fig. 8 illustrates the working mechanism for this specific device. This structure allows the TENG to be self-restorable as there is no need of extra spring usage. This is a great advantage for this device. The structure was elaborated using the capacitor model. The generator's resonance frequency was measured to be about 100Hz and the open circuit voltage and short circuit current produced were measured to be 72V and 32μA correspondingly. The peak power density was measured to be 0.4W/m^2 which is a quite large current density value for TENG. That means that this device can be used to harvest large-scale water wave energy.

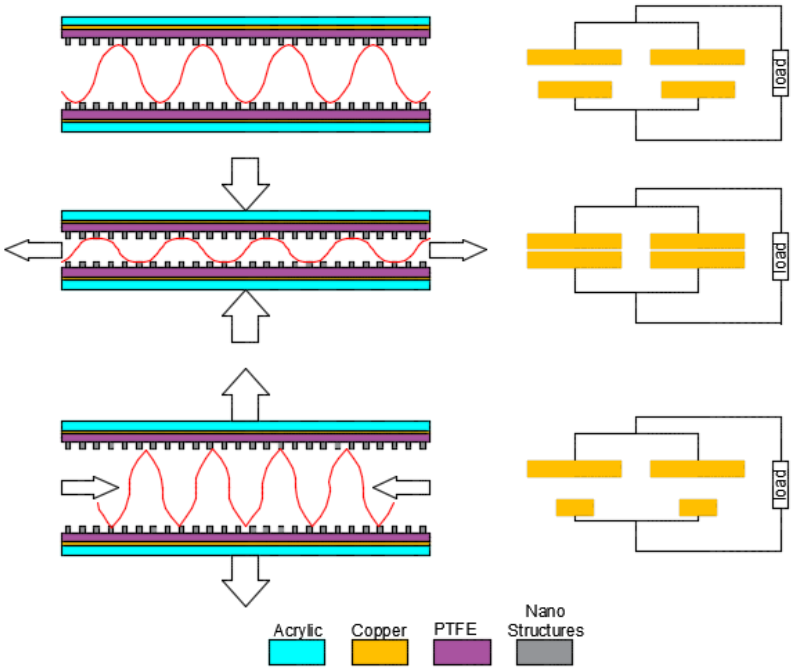

Fig. 8. Description of the TENG's working mechanism and the Equivalent circuit of the device [14]

Ahmed et. al [20] constructed a fully enclosed duck-shaped TENG in order to harvest energy from random and low-frequency water waves. The design uses the freestanding rolling mode and the pitch motion of a duck-shaped structure. They also constructed a hybrid system that uses three units of this duck-shaped specific TENG. This hybrid system achieved an instantaneous peak current of 65.5μA with an output power density of up to 1.366 W m^{-2}.

The hybrid system was tested by enabling a commercial wireless temperature sensor node. The major problem with these devices is the humidity. The structure should be water protected not only because of the quick aging but also because humidity can alter the interfacial phenomenon of electrification, causing a quick dissipation of the surface charge density. However, if this device is well protected, it is a great solution for a network of generators. The duck shape has an additional advantage. It is laboratory tested that it can extract more than 80% of the mechanical energy in a wave. This is a clever way of increasing the total efficiency of a TENG. The duck-shaped TENG structure is proposed as a cost-effective, sustainable and maintenance free power source, especially for wireless sensor networks. The operation principle and the materials' selections for the duck-shaped TENG are illustrated in Fig. 9.

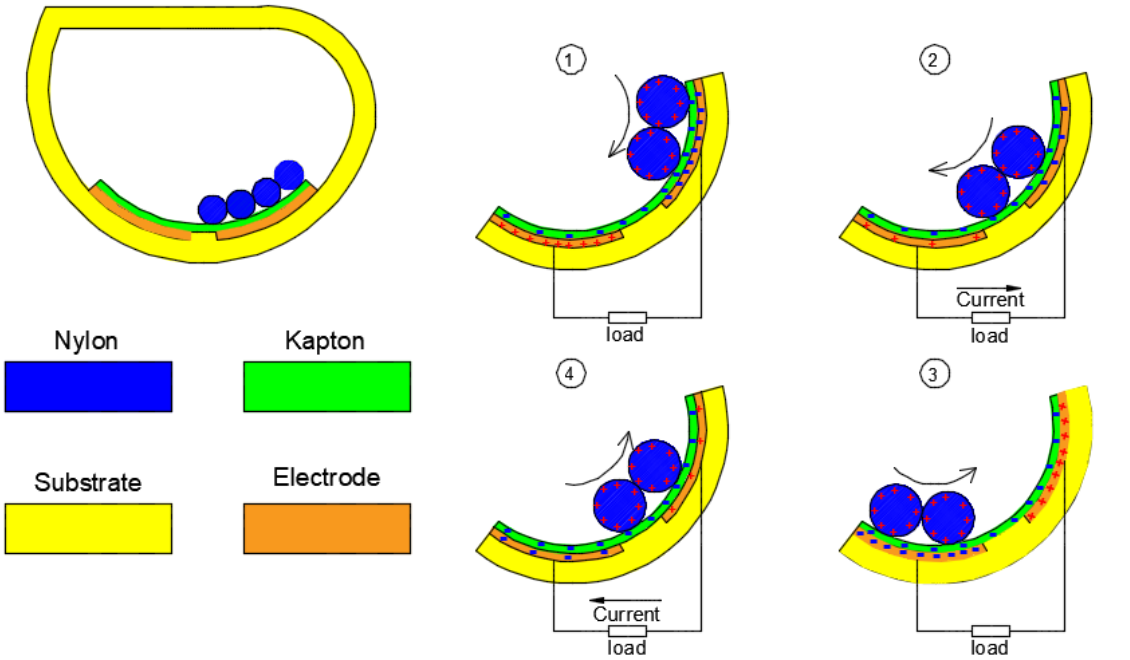

Fig. 9. Schematic configuration of a freestanding duck-shaped energy harvester based on rolling contact and the working principle of the device for different ball positions [20]

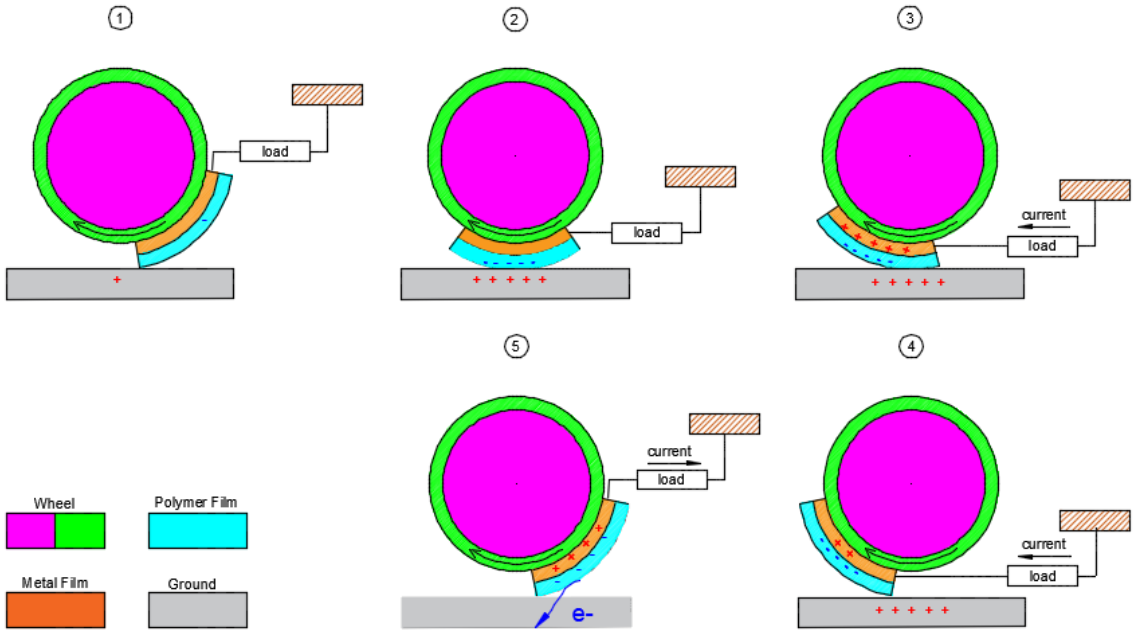

Fig. 10. The working mechanism for a TENG Device that is used on a wheel [21]

The TENGs' application expands in many areas. Such an area is the application of TENG on tires. Mao et. al. in their work [21] used the friction energy from rolling tires in order to scavenge energy. This is a technology that could apply to vehicles, as it may improve fuel efficiency or the cruising ability of electric vehicles. According to their work, the maximum instantaneous power for the TENG device that they constructed was obtained to be 1.79 mW at a load resistance of 10 MΩ. The consumed energy from rolling resistance is estimated at about 5-7% according to the US Department of Energy, so this lost power can be used in order to produce electricity using a TENG. Fig. 10 shows the working mechanism for this TENG device. The average peak open circuit voltage for this device and the short-circuit current were measured at 2.3 V and 2.0 μA respectively. The experiment took place onto the surface of a rubber wheel with 7 cm in diameter, when the wheel was moving at a linear speed of 0.3m/s. The TENG's dimensions were 1cm x 1cm x 120μm. The output of a compact TENG system on rolling tires can be increased with the usage of multiple TENGs of this type on tires' surfaces.

Although TENGs have high power conversion efficiency (PCE), they usually take a low energy input which results in low output power. Wook Kim et al. [22] report a kinematic design of TENGs in order to improve the PCE. They designed a gear-based TENG system. They tested their system for different ratios and in different working frequencies and concluded that for their experiments a gear ratio of 5 with a working frequency of 4.5Hz can give promising results. This system output 320V in contrast with a gear ratio system of 1 and 1.7 that resulted to voltage outputs of 105V and 200V respectively. Fig. 11 shows the working principle of the system.

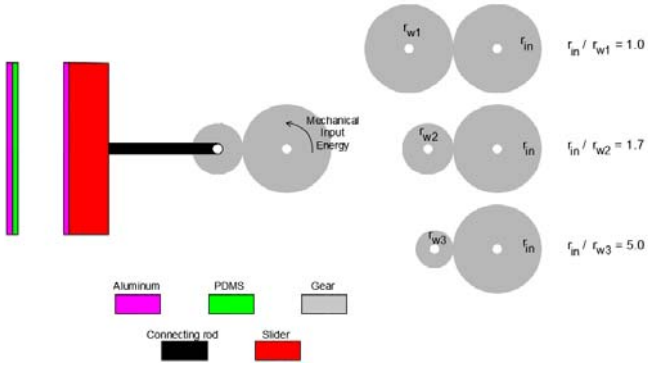

Fig. 11. Kinematic mechanism based TENG system [22]

Another clever technique in order to use TENGs is a bellows-type TENG as Chung et al. constructed and reported

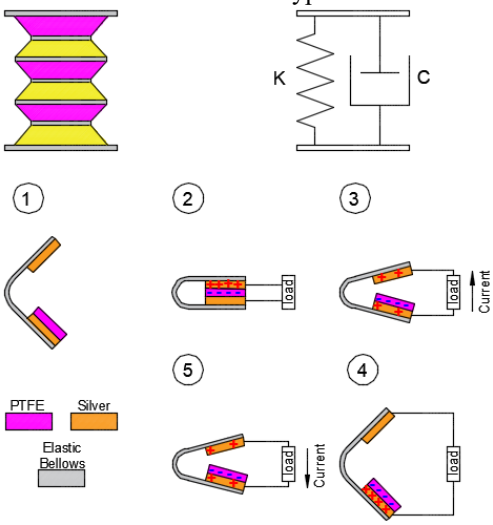

Fig. 12. Elastic bellows-type triboelectric nanogenerator [23]

[23]. The elastic component is compactly integrated with the TENG for practical use. **Error! Reference source not found.** shows the working mechanism. The concept is that when the device is pressed, the elastic component naturally restores to its original shape. In this device, there is no need for an extra spring. They tested their device with a pressed frequency of 6Hz and the device generated 132V open circuit voltage and 22 μA of closed-circuit current.

The evolution of IoT has increased the needs for power supply in remote areas not based on conventional power supply solutions such as batteries. As portable electronics are fast growing, there is a trend on developing built-in energy harvesters for various applications aiming at the self-charging capability of portable electronics without external power sources [24,25]. The reliance on external power sources and the battery maintenance and operation cost would significantly limit the successful deployment of sensor networks especially in industrial and difficult to access environments [26]. The evolution in IoT technologies has led to the Wearable Internet of Things which is the implementation of IoT in wearable devices. Generally, a TENG is assumed to be an efficient energy harvester for self-powering sensors [27,28]. Such devices can range from a simple athlete's heart rate monitor to a large accurate medical sensor. There is an increased trend for human activity recognition and that is the scope of work of Hui et al [9]. They developed a structure in order to collect motion signals caused by physical activities. This structure is promising due to its high output voltage in random low-frequency motion and a relatively stable voltage when involving continuous activities. The structure consists of two different parts, the self-powered motion sensor, and the energy harvester. Fig. 13 shows the system's structure and the working principle for this specific device.

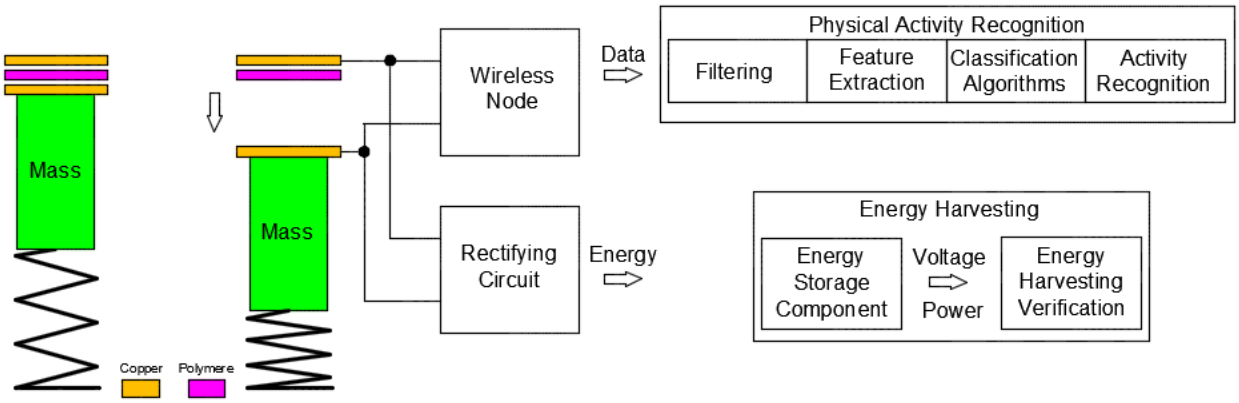

Fig. 13. Basic structure of self-powered triboelectric motion sensor and energy harvester [9]

A very attractive implementation is the use of hybrid technologies that contain TENGs. Such an example is the work of Salauddin et. al [29] where they developed a free motion driven hybridized electromagnetic and triboelectric nanogenerator for scavenging low-frequency ambient vibrations with dual a Halbach array, nano-structured PTFE, and Al nano-grass. Their prototype's dimensions were 4.5 x 1.5 x 2.4 cm^3. The maximum output voltage point was at 5Hz and they measured an open circuit peak to peak voltage of 2.9V and 176 V for the EMG and the TENG respectively at an acceleration of 0.5g. The EMG's output current was 2.1mA whereas the TENG's output current was 21μA with a maximum output power of 2.52mW and 1.93mW under a loading resistance of 77Ω and 10MΩ respectively. Fig. 14 illustrates this hybrid generation structure.

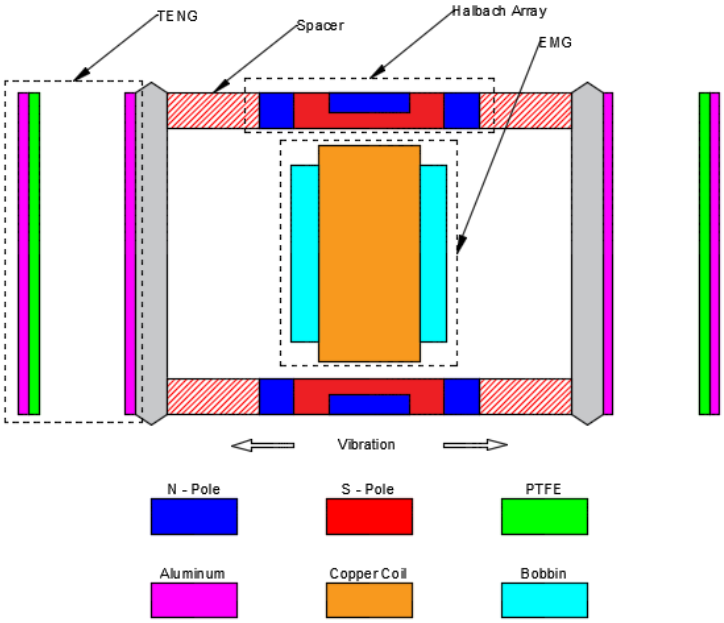

Fig. 14. Schematic structure of the proposed EMG and TENG hybrid energy harvester [29]

4. Conclusions and Future Perspective

Triboelectric is a phenomenon well known from the ancient times, that have a attracted new attention due to the technological advances in material manufacturing and the needs for small and large scale applications that demand Energy harvesting and GHG emissions reduction. Charge creation through friction happens in too many everyday activities. This was the key along with the need for new sustainable energy needs that drive the first research activities leading to the development of different approaches to the creation of TENGs. The knowledge gained in the recent years is growing together with the number of researchers working in this scientific area. This activity has leaded to an increasing number of possibilities explored worldwide, for the utilization of this form of electric energy produced from everyday activities. The results presented in the article are promising And a new generation of TENGs have been developed , both on a macroscopic scale (such as waves in the ocean) and on a microscopic scale (body movements, muscular contractions, blood flow), creating a huge scope of potential for energy retrieval and generation. The TENGs have the potential and the capacity to become one of the solutions for a greener and more sustainable future in the energy generation sector and especially for wearable devices and IoT applications.

Acknowledgements

This publication was supported by the MSc program for “Internetworked Electronics” of the Piraeus University of Applied Sciences.

References

[1] M. C. Hamilton. Recent advances in energy harvesting technology and techniques. *IECON 2012 - 38th Annual Conference on IEEE Industrial Electronics Society*. Montreal, QC, 2012, pp. 6297-6304; doi: 10.1109/IECON.2012.6389019.

[2] M. Salauddin, J.Y. Park. Design and experiment of human hand motion driven electromagnetic energy harvester using dual Halbach magnet array. Smart Materials and Structures, vol. 26, pp. 035011, 2017; doi:10.1088/1361-665X/aa573f.
[3] M.S. Rasel, J.Y. Park. A sandpaper assisted micro-structured Polydimethylsiloxane fabrication for human skin based triboelectric energy harvesting application. Applied Energy, vol. 206, pp. 150-158,2017; https://doi.org/10.1016/j.apenergy.2017.07.109
[4] S.D. Nguyen, E. Halvorsen. Nonlinear Springs for Bandwidth-Tolerant Vibration Energy Harvesting. Journal of Microelectromechanical Systems, vol. 20, pp. 1225-1227, 2011**;** doi: 10.1109/JMEMS.2011.2170824.
[5] M.A. Halim, S.Khym, J.Y. Park. Frequency up-converted wide bandwidth piezoelectric energy harvester using mechanical impact. Journal of Applied Physics, vol. 114, pp. 044902-5, 2013; https://doi.org/10.1063/1.4816249.
[6] S. Varghese, S. Shafeek, R. S. Kumar, R. S. Mini. Computational investigation of material combinations in triboelectric generators. 2017 International Conference on Electrical and Computing Technologies and Applications (ICECTA). Ras Al Khaimah, 2017, pp. 1-4; doi: 10.1109/ICECTA.2017.8252067.
[7] Y. Yang, H. Zhang, J. Chen, Q. Jing, Y. S. Zhou, X. Wen, Z. L. Wang. Single-Electrode-Based Sliding Triboelectric Nanogenerator for Self-Powered Displacement Vector Sensor System. ACS Nano 2013, 7 (8), 7342-7351; doi: 10.1021/nn403021m.
[8] S. Wang , Y. Xie , S. Niu , L. Lin , Z. L. Wang. Freestanding Triboelectric-Layer-Based Nanogenerators for Harvesting Energy from a Moving Object or Human Motion in Contact and Non-contact Modes. Adv. Mater., 26: 2818-2824; doi:10.1002/adma.201305303.
[9] H. Huang, X. Li, S. Liu, S. Hu, Y. Sun. TriboMotion: A Self-Powered Triboelectric Motion Sensor in Wearable Internet of Things for Human Activity Recognition and Energy Harvesting. IEEE Internet of Things Journal; doi: 10.1109/JIOT.2018.2817841.
[10] Z. L. Wang, T. Jiang, L. Xu. Toward the blue energy dream by triboelectric nanogenerator networks. Nano Energy, 39, 2017, Pages 9-23, ISSN 2211-2855; https://doi.org/10.1016/j.nanoen.2017.06.035.
[11] X. Wang , S. Niu , Y. Yin , F. Yi , Z. You , Z. L. Wang. Triboelectric Nanogenerator Based on Fully Enclosed Rolling Spherical Structure for Harvesting Low-Frequency Water Wave Energy. Advanced Energy Materials,5, 2015; doi: 10.1002/aenm.201501467.
[12] G. Zhu, Y. Su, P. Bai, J. Chen, Q. Jing, W. Yang, Z. L. Wang. Harvesting Water Wave Energy by Asymmetric Screening of Electrostatic Charges on a Nanostructured Hydrophobic Thin Film Surface. ACS Nano 2014, 8 (6), 6031-6037; doi: 10.1021/nn5012732.
[13] Lin, Z., Cheng, G., Lee, S. , Pradel, K. C. , Wang, Z. L. Harvesting Water Drop Energy by a Sequential Contact-Electrification and Electrostatic-Induction Process. Adv. Mater., 26: 4690-4696; doi:10.1002/adma.201400373.
[14] X. Wen, W. Yang, Q. Jing, Z. L. Wang. Harvesting Broadband Kinetic Impact Energy from Mechanical Triggering/Vibration and Water Waves. ACS Nano 2014, 8 (7), 7405-7412; doi: 10.1021/nn502618f.
[15] N. Elvin, A. Erturk. Advances in energy harvesting methods. Springer Science & Business Media, 2013.
[16] U. T. Jurado, S. H. Pu., N. M. White, A contact-separation mode triboelectric nanogenerator for ocean wave impact energy harvesting, 2017 IEEE SENSORS, Glasgow, 2017, pp. 1-3; doi: 10.1109/ICSENS.2017.8234198
[17] C. McGowin. Ocean Tidal and Wave Energy: Renewable Energy Technical Assessment Guide. Electric Power Research Institute, Palo Alto, CA, Paper No. TAG-RE, 2005.
[18] R. B. Mayon, Z. Sabeur, M. Tan, K. Djidjeli. Analysis of fluid flow impact oscillatory pressures with air entrapment at structures. Coastal Engineering Proceedings, vol. 1, p. 31, 2017.
[19] Z. A. S. R.B. Mayon, M. Tan, K. Djidjeli. Investigation of Wave Impacts on Porous Structures for Coastal Defences. 12th International Conference on Hydrodynamics (ICHD). 18-23 September 2016, Delft, Netherland, 2016.
[20] A. Ahmed, Z. Saadatnia, I. Hassan, Y. Zi, Y. Xi, X. He, J. Z.,Zhong L. Wang. Self-Powered Wireless Sensor Node Enabled by a Duck-Shaped Triboelectric Nanogenerator for Harvesting Water Wave Energy. Advanced Energy Materials, 2016; doi: 10.1002/aenm.201601705.
[21] Y. Mao, D. Geng, E. Liang, X. Wang. Single-electrode triboelectric nanogenerator for scavenging friction energy from rolling tires. Nano Energy,Volume 15, 2015, Pages 227-234, ISSN 2211-2855; https://doi.org/10.1016/j.nanoen.2015.04.026.
[22] W. Kim, H. J. Hwang, D. Bhatia, Y. Lee, J. M. Baik, D. Choi. Kinematic design for high performance triboelectric nanogenerators with enhanced working frequency. Nano Energy, Volume 21, 2016, Pages 19-25, ISSN 2211-2855,; https://doi.org/10.1016/j.nanoen.2015.12.017.
[23] J. Chung, S. Lee, H. Yong, H. Moon, D. Choi, S. Lee. Self-packaging elastic bellows-type triboelectric nanogenerator. Nano Energy, Volume 20, 2016, Pages 84-93, ISSN 2211-2855; https://doi.org/10.1016/j.nanoen.2015.12.006.
[24] K. Zhang, X. Wang, Y. Yang, Z.L. Wang. Hybridized Electromagnetic Triboelectric nanogenerator for Scavenging Biomechanical Energy for Sustainably Powering Wearable Electronics. ACS Nano, vol. 9, pp. 3521-3529, 2015; doi: 10.1021/nn507455f.
[25] Y. Hu, J. Yang, S. Niu, W. Wu. Hybridizing Triboelectrification and Electromagnetic Induction Effects for High-Efficient Mechanical Energy Harvesting. ACS Nano, vol. 8, pp. 7442-7450, 2014; doi: 10.1021/nn502684f.
[26] Y. Su, G. Xie, S. Wang, H. Tai, Q. Zhang, H. Du, X. Du, Y. Jiang. Self-Powered Humidity Sensor based on Triboelectric Nanogenerator. 2017 IEEE SENSORS, Glasgow, 2017, pp. 1-3; doi: 10.1109/ICSENS.2017.8234280.
[27] Z. L. Wang, L. Lin, J. Chen, S. Niu, Y. Zi. Triboelectric Nanogenerators. Applications in Selfpowered Systems and Processes. ed: Springer, 2016, pp. 351-398.
[28] Z. L. Wang, L. Lin, J. Chen, S. Niu, Y. Zi, Triboelectric Nanogenerators. Harvesting Large- Scale Blue Energy. ed: Springer, 2016, pp. 283-306.
[29] M. Salauddin, R.M. Toyabur, J.Y. Park. A free motion driven electromagnetic and triboelectric Hybridized nanogenerator for scavenging low frequency Vibrations. 2018 IEEE Micro Electro Mechanical Systems (MEMS), Belfast, 2018, pp. 233-236; doi: 10.1109/MEMSYS.2018.8346527